PERIODICA POLYTECHNICA SER. TRANSP. ENG. VOL. 21, NO. 3, PP. 209–228 (1993)

SELF-STEERING BEHAVIOUR OF HIGH-SPEED TRACTOR-SEMITRAILER AND ITS CONTROL

László PALKOVICS, Lajos ILOSVAI and János ILLÉS

Institute of Vehicle Engineering
Technical University of Budapest
H–1521 Budapest, Hungary

Received: Nov. 14, 1992

Abstract

The loss of the stability of heavy highway tractor-semitrailer combinations is the usual cause of several serious traffic accidents. One of the reasons is the different behaviour of the vehicle under changed conditions (e.g. different loading conditions, abrupt side wind gust acting on the vehicle, etc.) which is not expected by the driver or it differs from the usual one. The authors of the paper study the behaviour of the articulated vehicle from the point of view of the steerability and define the conditions of self-steering characteristics of articulated vehicles. In the paper, linear model of the articulated vehicle is used, but the simulations are carried out for more realistic non-linear two-track model including real tyre model. On the basis of the results of the above written examination, the authors deal with the improvement of the lateral stability of the tractor-semitrailer combination using controlled elements in the vehicle chassis, namely the steering of the rear axle of the tractor is examined, however, the practical realization is complicated. Possible solution is proposed instead of the steering of the rear wheels of the tractor based on control of their side slip angles. Results are shown on controlled steering of the wheels on the axle(s) of the trailer. In both mentioned cases, new method of the robust control design is used called Robust LQR (RLQR). Design of the anti-jackknifing device is demonstrated, which means the semi-active control of the switchable damper in the joint.

1. Introduction

Nowadays the up-to-date engine technology makes the reacheable speed and power of the vehicles higher and higher. On one hand, this is very important when transporting goods and people and the time is limited (e. g. deteriorating foods, animals, etc.) On the other hand, one has to take care of the safety of the transportation process which is obviously endangered by fast vehicles. This danger is much higher when a heavy vehicle loses its stability. That is why preserving of the stability and steerability of such vehicles is desirable. However, in some cases the driver is not able to control the motion of the vehicle because of some changes in the parameters and driving conditions (e. g. unusual loading conditions, slippery road surface, etc.). In these cases, one can use some active elements in the vehicle

improving the steerability and stability of the vehicle. In the present paper, the attention is focused on the control of the high-speed tractor-semitrailer vehicle combination.

The main goal of the controller design is to achieve the predefined desired characteristics of the vehicle. Thus the importance of selection of the suitable control strategy is obvious. In this case, the definition of the desired trajectory to be followed by the vehicle is not straightforward, one has to do some preliminary calculation. When investigating the lateral stability in some papers, the virtual model following principle is used (see e.g. NAGAI and OHKI (1985)), which always has a problem of the definition of virtual model, though it can be used in the case of single vehicle. When concentrating on the stabilization of articulated vehicles, some other measure of the optimality should be found. In the case of heavy vehicles, EL-GINDY (1992) and WOODROOFFE et al (1992) have investigated the possible performance measures which can be used in the design and regulation as well. The defined measures of handling will be discussed more detailed in the following parts of the paper. Though the self-steering characteristics of a single vehicle is defined in the relevant literature (c.f. in ELLIS (1960), or WONG (1980)), this feature of the articulated vehicle has not been investigated so far. In ILOSVAI's and PALKOVICS's paper (1990), some aspects of the city articulated buses are discussed but as it will be shown, there is a slight difference in the self-steering properties of the buses and tractor-semitrailers. By defining the optimality criterion of the tractor-semitrailer combination, the suitable controller design method will be proposed in the paper.

In the paper, authors examine the effect of the individual steering of the rear axle of tractors as a principal solution, but the practical realization raises some additional problems (e.g. large brake/tractive forces, steering mechanism of double tyres, etc.). That is why some more realistic solutions are offered based on the controlled impulse like braking of the rear wheels of the tractor. The authors deal with the design of the controllable anti-jackknifing devise applied in the joint, which can be considered as a semi-active damper. Suitable control design methodology is proposed in the paper.

2. Problem Formulation

The most dangerous undesirable motions of tractor-semitrailer vehicle combination can be classified as follows (c.f. in VERMA et al (1980)):

- *jackknifing* which is mainly caused by the uncontrolled large relative motion of the tractor and trailer, which results in the lateral slip of the

rear axle of the tractor. The jackknifing phenomenon is one the most usual causes of serious traffic accidents in which the tractor-semitrailer is involved. The main problem of this type of losing stability is that after a certain articulation angle the driver is not able to control the motion of the vehicle with the rear wheel steering effort alone, and the intervention in wrong direction makes the situation even more dangerous. The aim of the control is to prevent the developing of the above described critical situation. By using controlled elements, the probability of jackknifing can be decreased with the elimination of the subjective and slow reaction of the driver. In this case, the steering of rear wheels of the tractor seems to be an appropriate solution to avoid the jackknifing, because with the steering of the wheels of the middle axle in the same sense as the front ones, the reaction time of the trailer can be decreased thus the relative angle between the tractor and the trailer becomes smaller and the lateral acceleration of the front and rear units are also reduced.

- *lateral oscillation of the trailer* is caused by some disturbances (e. g. side wind gust, abrupt steering effort of the driver) acting on the vehicle when the parameters of the system are close to the critical ones. It means that after some disturbance the stable straight motion loses the stability and the system's trajectory will tend to some other limit set whose type depends on the system. In the papers of TROGER and ZEMAN (1984) and KACANI et al (1987), the non-linear stability problems of the tractor-semitrailer combination are discussed more detailed and the system is investigated after the loss of stability. On the basis of the mentioned papers, the speed of the vehicle and the position of CG of rear vehicle units seem to be critical parameters of the system. By changing the above written two parameters, the system loses the stability in a different way and causes the oscillatory motion of the trailed vehicle unit.

Analyzing the behaviour of the system, one can observe that the driver can control the motion of the entire vehicle only on the basis of the given state of the front vehicle unit. By using the simplest possible driver's model described in MITSCHKE and NAGAI (1985) achieving predictive control, the block diagram of the closed-loop system is shown in *Fig. 1*.

As it can be observed according to *Fig. 1*, the driver's judgement depends only on the motion of the front vehicle part, but the controller can use information both from the front and rear units.

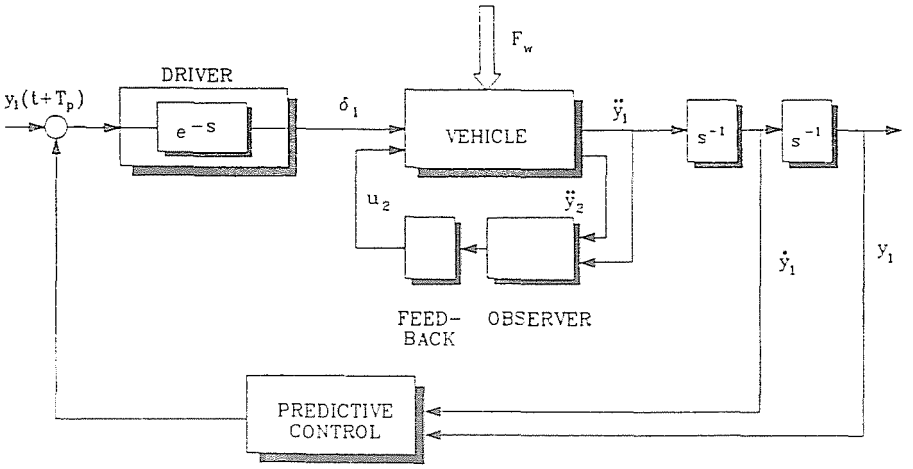

Fig. 1.

3. Linear Vehicle Model

The main goal of the present paper is to define the self-steering characteristics of the tractor-semitrailer vehicle and apply suitable control to increase the stability and steerability, thus we use a simple linear model of the vehicle shown in *Fig. 2*. The analytical results can be extended to the non-linear vehicle model as well, the simulational results shown in the second part of the paper are achieved by using non-linear multi-degree-of-freedom model using more realistic tyre model introduced by PACEJKA (1987). The above mentioned model is widely used in the relevant literature, thus the terms not explained here can be found e.g. in ELLIS (1960). The simplified linear equations of motion can be written as (for the sake of simplicity the self-aligning torques are neglected for a while)

Tractor:

$$m_1 v \left(\dot{\Psi}_1 + \dot{\beta}_1\right) = F_1 + F_2 + F_y + F_{w1}\,, \tag{1}$$

$$J_1 \ddot{\Psi}_1 = F_1 l_1 - F_2 l_2 - F_y l_h - F_{w1} l_{w1} - M_c - M_o\,. \tag{2}$$

Trailer:

$$m_2 v \left(\dot{\Psi}_2 + \dot{\beta}_2\right) = F_3 - F_y + F_{w2}\,, \tag{3}$$

$$J_2 \ddot{\Psi}_2 = -F_3 l_4 - F_y l_3 + M_c - F_{w2} l_{w2}\,. \tag{4}$$

By assuming linear tyre model, and neglecting the geometric non-linearities, the equations of motion can be written in the usual form

$$\mathbf{M}\dot{\mathbf{x}}(t) = \mathbf{P}\mathbf{x}(t) + \mathbf{D}_{\delta_1}\delta_1(t) + \mathbf{D}_{F_w}\mathbf{F}_w(t) + \mathbf{C}\mathbf{u}_2\,, \tag{5}$$

where the meaning of matrices can be found in Appendix A with the state vector

$$\mathbf{x}^T = [\,\dot{\Psi}_1 \quad \Delta\dot{\Psi} \quad \beta_1 \quad \Delta\Psi\,]\,.$$

By rewriting *Eq.* (5) in a state-space form:

$$\dot{\mathbf{x}}(t) = \mathbf{A}_0\mathbf{x}(t) + [\,\mathbf{B}_{1\delta_1} \quad \mathbf{B}_{1F_w}\,] \cdot \begin{bmatrix} \delta_1(t) \\ \mathbf{F}_w(t) \end{bmatrix} + \mathbf{B}_2\mathbf{u}_2(t) \tag{6}$$

or defining the suitable external disturbance vector, *Eq.* (6) can be written as

$$\dot{\mathbf{x}}(t) = \mathbf{A}_0\mathbf{x}(t) + \mathbf{B}_1\mathbf{u}_1(t)\mathbf{B}_2\mathbf{u}_2(t)\,, \tag{7}$$

where

$$\mathbf{u}_1^T(t) = [\,\delta_1(t) \quad F_{w1}(t) \quad F_{w2}(t)\,]$$
$$\mathbf{u}_2^T(t) = [\,\delta_2(t) \quad \delta_3(t) \quad M_c(t) \quad M_o(t)\,]$$

and the output equation can be considered as

$$\mathbf{y}_1(t) = \begin{bmatrix} \ddot{y}_1(t) \\ \ddot{y}_2(t) \end{bmatrix} = \mathbf{C}_1\mathbf{x}(t) + [\,\mathbf{D}_{11\delta_1} \quad \mathbf{D}_{11F_w}\,] \cdot \begin{bmatrix} \delta_1(t) \\ \mathbf{F}_w(t) \end{bmatrix} + \mathbf{D}_{12}\mathbf{u}_2(t) \tag{8}$$

or

$$\mathbf{y}_1(t) = \mathbf{C}_1\mathbf{x}(t) + \mathbf{D}_{11}\mathbf{u}_1(t) + \mathbf{D}_{12}\mathbf{u}_2(t) \tag{9}$$

and the state vector will be considered as the measurable output of the system. The meaning of matrices can be found in Appendix B. The above description of the linear vehicle model by *Eq.* (7) and *Eq.* (9) is suitable to formulate the control problem of the tractor-semitrailer vehicle combination.

4. Solution under Steady-State Conditions

To determine the self-steering feature of the articulated vehicle, the equations of motion described by *Eq.* (7) should be solved under steady-state conditions, namely:

$$\ddot{\Psi}_1 = \ddot{\Psi}_2 = 0 \Rightarrow \dot{\Psi}_1 = \dot{\Psi}_2 = \dot{\Psi}_s = \text{const.}$$

$$\Delta\Psi = \Delta\Psi_s = \text{const.}$$

$$\dot{\beta}_1 = \dot{\beta}_2 = 0 \Rightarrow \beta_1 = \beta_2 = \beta_s = \text{const.}$$

By omitting the more detailed derivation (see in Vlk, 1984), the steady-state expressions of the transfer functions between the steering angle of the

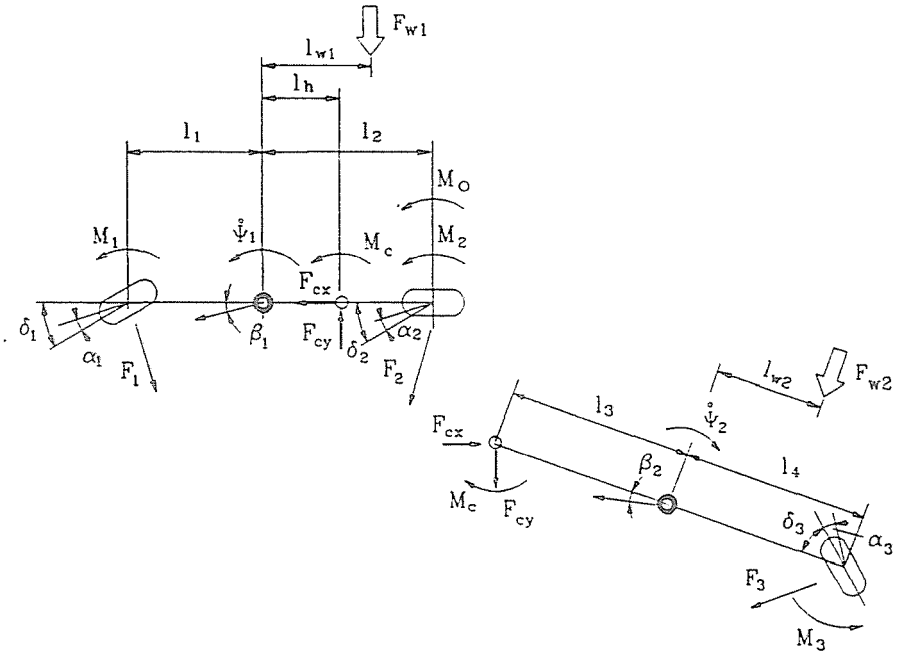

Fig. 2.

conventionally steered articulated vehicle and the state variables can be written as

$$\dot{\Psi}_s = \frac{v}{K_{n1}v^2 + (l_1 + l_2)}\delta_1\,, \tag{10}$$

$$\beta_s = \frac{l_2 - \frac{F_{z2}}{C_{F\alpha 2}}v^2}{K_{n1}v^2 + (l_1 + l_2)}\delta_1\,, \tag{11}$$

$$\Delta\Psi_s = \frac{K_{n2}v^2 + (l_3 + l_4 + l_h - l_2)}{K_{n1}v^2 + (l_1 + l_2)}\delta_1\,, \tag{12}$$

where the so-called self-steering coefficients are defined as

$$K_{n1} = \left[\frac{F_{z1}}{C_{F\alpha 1}} - \frac{F_{z2}}{C_{F\alpha 2}}\right]\frac{1}{g}\,, \qquad K_{n2} = \left[\frac{F_{z2}}{C_{F\alpha 2}} - \frac{F_{z3}}{C_{F\alpha 3}}\right]\frac{1}{g}\,. \tag{13}$$

As it is known, the self-steering characteristics of the single vehicle are defined by the sign of K_{n1}, that is when its sign is positive, the vehicle is said to be *understeered*, when it is equal to zero, the car is *neutrally*

steered, and *oversteered* when its value is negative. As it can be seen from the expressions of *Esq.* (10–12), the main features of the vehicle depend on the sign of K_{n1}, but there is no effect of the characteristics of the rear unit on the front one. Investigating the above formulae, we can conclude that K_{n2} plays the same role as K_{n1}. By rearranging *Eqs.* (10–12), the following expressions are obtained:

$$\dot{\Psi}_2 = \frac{v}{K_{n2}v^2 + (l_3 + l_4 + l_h - l_2)} \Delta\Psi\,, \tag{14}$$

$$\beta_s = \frac{l_2 - \frac{F_{z2}}{C_{F\alpha 2}} v^2}{K_{n2}v^2 + (l_3 + l_4 + l_h - l_2)} \Delta\Psi\,. \tag{15}$$

Defining the 'virtual vehicle' shown in *Fig. 3*, which in fact contains the rear part of the tractor and the trailer, K_{n1} and K_{n2} can be called *partial self-steering coefficients* of the articulated vehicle.

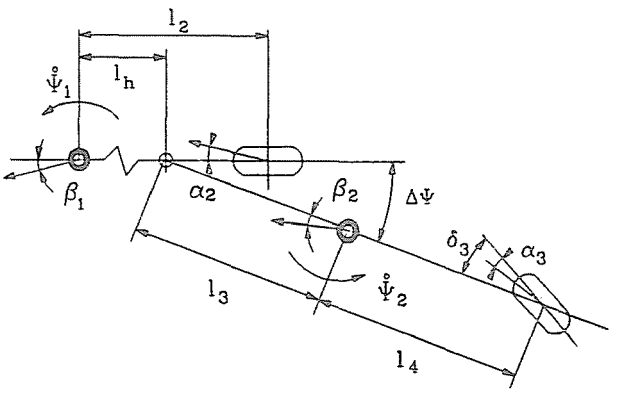

Fig. 3.

By investigating the behaviour of the articulated vehicle, all the possible cases are considered as it is shown in *Table 1*. The parameters of the model vehicle are shown in *Table 2*.

Instead of depicting the above transfer functions for all the cases shown in *Table 1*, the transfer functions between the lateral accelerations of both front and rear vehicle units and front wheel steering angle are shown in *Fig. 4*. In case the high-speed tractor-semitrailer has large side surface at rear, the transfer function between the lateral acceleration and side forces is also important as shown in *Fig. 5*. By investigating all the

Table 1

K_{n1}	K_{n2}	Tyre cornering stiffness ($C_{F\alpha 1}/C_{F\alpha 2}/C_{F\alpha 3}$) [N/rad]
0	0	160000/868571/594285
+	0	120000/868571/594285
+	+	120000/868571/891427
+	−	120000/868571/450216
0	+	160000/868571/891427
0	−	160000/868571/450216
−	+	235293/868571/891427
−	−	235293/868571/450216
−	0	235293/868571/594285

Table 2

Parameters	Symbols	Unit	Value
Yaw of inertia of front unit	J_1	kgm^2	4100
Yaw of inertia of rear unit	J_2	kgm^2	47000
Front axle location of the tractor	l_1	m	1.143
Rear axle location of the tractor	l_2	m	1.6002
Fifth wheel location	l_h	m	1.2192
Location of the king pin	l_3	m	3.5
Location of the rear axle of the trailer	l_4	m	4
Mass of the front unit	m_1	kg	8268
Mass of the rear unit	m_2	kg	27562.1

Table 3

$l_h - l_2$	K_{n1}	K_{n2}	Type of vehicle
> 0	> 0	> 0	Articulated buses
< 0	> 0	< 0	Tractor-semitrailer

possible cases, the best results can be achieved depending on the relation between l_h and l_2. The results are summarized in *Table 3*.

As it can be seen in *Table 3*, considering the tractor-semitrailer the best case is when the front vehicle unit is *understeered* and the rear (or virtual) vehicle is *oversteered* (according to the definition in *Eq.* (13)). This short examination shows what desired characteristics are to be reached

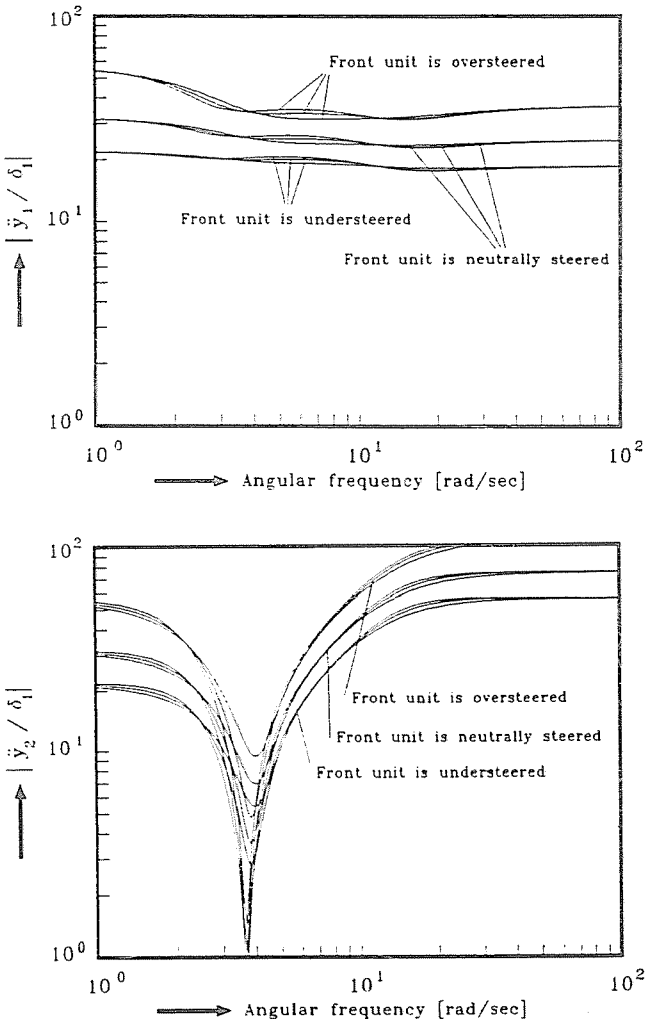

Fig. 4.

during the design of the vehicle and how to determine the operational parameters (e. g. internal tyre pressures, loading conditions, etc.).

5. Control Objectives and Design of the Controller

In the last part of the study, the desired self-steering characteristics were determined. Afterwards, the optimal vehicle will be considered as defined

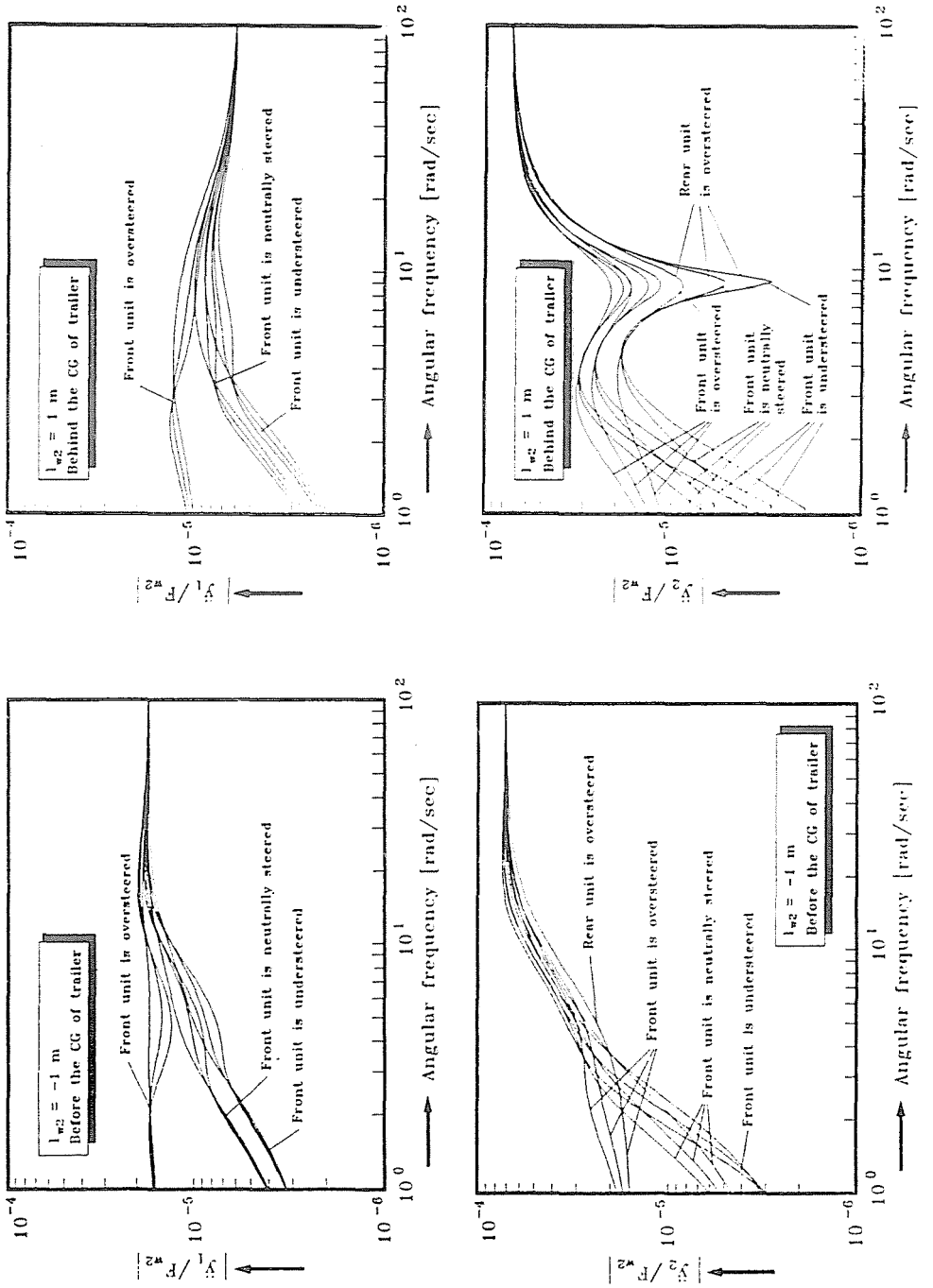
l_{w2} = 1 m
Behind the CG of trailer
Front unit is oversteered
Front unit is neutrally steered
Front unit is understeered
l_{w2} = 1 m
Behind the CG of trailer
Rear unit is oversteered
Front unit is oversteered
Front unit is neutrally steered
Front unit is understeered
l_{w2} = -1 m
Before the CG of trailer
Front unit is oversteered
Front unit is neutrally steered
Front unit is understeered
l_{w2} = -1 m
Before the CG of trailer
Rear unit is oversteered
Front unit is oversteered
Front unit is neutrally steered
Front unit is understeered
$|\dot{y}_1/F_{w2}|$
$|\dot{y}_2/F_{w2}|$
Angular frequency [rad/sec]
10^{-4}
10^{-5}
10^{-6}
10^{0}
10^{1}
10^{2}

Fig. 5.

in *Table 3*. The aim of the control design is to keep the trajectory of the motion of the real vehicle to the optimal trajectory defined by the optimal model as close as possible. This approach is called a ***virtual model following control*** as it is widely used in the design of active 4WS system, c.f. in PALKOVICS (1992). The extended performance index similar to that given by KAGEYAMA and SAITO (1987) can be written as

$$J_{LQR} = \lim_{T\to\infty} \frac{1}{T} \int_0^T \left(q_1 \dot{\Psi}_1^2 + q_2 \Delta\dot{\Psi}^2 + q_3 \beta_1^2 + q_4 \Delta\Psi^2 + q_5 F_{cy}^2 \right) \mathrm{d}t \,. \tag{16}$$

The performance index can be rewritten in the standard form with cross terms. Because of the difference between the orders of the terms in the performance index, one should use the normalized weighting factors avoiding the problems during the computation. With the assumption that the states of the model are available by using the direct state-feedback compensation, the form of the feedback 'force' can be considered:

$$\mathbf{u}_2 = -\mathbf{K}\mathbf{x} \,. \tag{17}$$

As it can be seen from *Eq.* (17), the feedback force is a linear combination of the state variables using some appropriate feedback matrix. The control inputs of the system will be the following signals:

- steering angle of the rear wheel of the tractor (δ_2),
- steering angles of the wheels of the trailer (δ_3),
- active moment in the joint acting on both rear and front vehicle units in opposite sense (M_c),
- active torque acting on the front unit only (M_o).

5.1. Controller Design

The conventional LQR solution to the problem means the determination of the optimal control force minimizing the performance index described in *Eq.* (16), and the state feedback matrix can be written as

$$\mathbf{K}_{LQR} = \mathbf{R}_0^{-1} \mathbf{B}_2^T \mathbf{X}_{LQR} \,, \tag{18}$$

where the $\mathbf{X}_{LQR} \geq 0$ solution of the following ARE:

$$\mathbf{X}_{LQR}\mathbf{A}_0 + \mathbf{A}_0^T \mathbf{X}_{LQR} + \mathbf{X}_{LQR}\mathbf{B}_2\mathbf{R}_0^{-1}\mathbf{B}_2^T\mathbf{X}_{LQR} + \mathbf{Q}_0 = 0 \,. \tag{19}$$

The problem of the LQR approach is that it guarantees the stability of the system while the parameters of the model are constant and there are no hidden non-linearities (e.g. high frequency vibrations, hysteresis). In the reality, the parameters of the vehicle are not constant but they can change during the operation, which can result in the loss of the stability and performance of the predetermined controller for the nominal parameter set. That is why some different method is offered called RLQR (Robust LQR) which allows the consideration of the physical parametric uncertainties.

One of the most important parametric uncertainty in the vehicle is the cornering stiffness of the tyre, which is non-linear function of the internal tyre pressure, temperature, vertical load of the tyre, etc. As it is shown in PALKOVICS (1992), the uncertainty of these parameters can make the understeered single vehicle oversteered and the controller calculated on the nominal parameter set makes the behaviour of the model even worse than the behaviour of the uncompensated vehicle. To avoid this problem, we will assume that the variation range of the cornering stiffnesses of the tyres are known, the state-matrix of the uncertain system separating the nominal and uncertain parts can be written

$$\mathbf{A} = \mathbf{A}_0 + \sum_{i=1}^{p} q_i \mathbf{E}_i \,, \tag{20}$$

where p is the number of uncertain parameters. It is reasonable to assume in the case of mechanical systems that

$$|q_i| \leq 1 \,, \qquad \operatorname{rank}(E_i) = 1 \quad (i = 1, 2, \ldots, p) \,. \tag{21}$$

Matrices $\mathbf{E}_i$ contain information on the structure of the uncertainties and uncertain numbers q_i on its size. The above written rank condition ensures that matrices $\mathbf{E}_i$ can be written as a dyad of two vectors:

$$\mathbf{E}_i = \mathbf{l}_i^T \mathbf{n}_i \,. \tag{22}$$

To define the following two hyper-vectors:

$$\begin{aligned} \mathbf{L} &= [\,\mathbf{l}_1 \quad \mathbf{l}_2 \quad \ldots \quad \mathbf{l}_p\,] \,, \\ \mathbf{N} &= [\,\mathbf{n}_1 \quad \mathbf{n}_2 \quad \ldots \quad \mathbf{n}_p\,] \,, \\ \Delta &= \operatorname{diag}\,\{q_1, q_2, \ldots, q_p\} \,. \end{aligned}$$

The state-space equation of the uncertain model can be written as:

$$\dot{\mathbf{x}} = \mathbf{A}_0\mathbf{x} + \mathbf{L}\Delta\mathbf{N}^T\mathbf{x} + \mathbf{B}_{1F_w}\mathbf{F}_w + \mathbf{B}_{1\delta_1}\delta_1 + \mathbf{B}_2\mathbf{u}_2 \,. \tag{23}$$

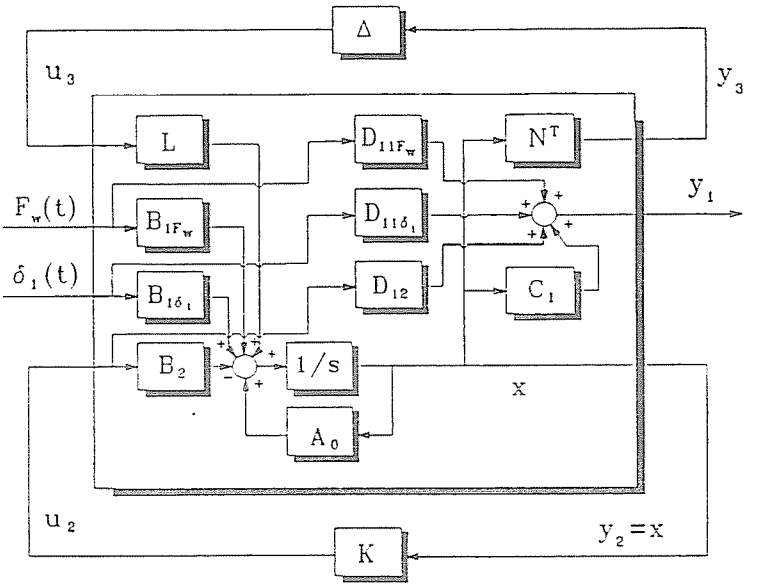

Fig. 6.

The block diagram of the system described by *Eq.* (23) and *Eq.* (9) can be seen in *Fig. 6.*

As it can be observed in *Fig. 6*, the system corresponds to the usual form of the H_∞ control problem introduced by DOYLE et al (1988). There are three sets of input and output. The first input to the system stands for the 'internal' disturbances arising from parametric uncertainty denoted by u_3. The second group of signals contains all the 'external' disturbances acting on the system (u_1). The third input signal involves the actuator inputs (u_2). The outputs can be classified in a similar way: the first output of the system belongs to the uncertainty denoted by y_3, the second one stands for all the outputs of the system that are in the centre of our interest (y_1). The third set of outputs contains all the measurable variables for feedback (y_2). The main objectives of the control strategy to minimize the large lateral acceleration of the vehicle bodies, to attenuate the external disturbances, and to make the controller robust in face of parametric uncertainties. (In this case, the steering angle of the front wheel can be considered as disturbance acting on the vehicle. In the reality, the situation is not so simple, we have to consider the driver's model as well, but it is neglected in this paper. In a future investigation of the problem it will be considered.)

The disturbance attenuation problem can be solved by using direct state-feedback H_∞ control design. The problem can be formulated as follows (see in FRANCIS (1987)): let us consider a lower part of the system shown in *Fig. 6*. The stable $\mathbf{K}_\gamma(s)$ is said to be admissible controller if it stabilizes the system and

$$\min_{K_\infty \in H_\infty} \|\mathbf{T}_{\tilde{y}_{1,2} F_w}\|_\infty = \min_{K_\infty \in H_\infty} \|\mathbf{F}_l(\mathbf{P}, \mathbf{K})\|_\infty = \gamma_0 < \gamma . \tag{24}$$

γ gives an upper border on the transfer function between the lateral acceleration and side disturbances acting on the vehicle body. The transfer function of the closed-loop system is called a linear fractional map of the system. The controller will minimize the following cost functional:

$$J_\infty(\gamma) = \lim_{T\to\infty} \frac{1}{T} \int_0^T \left[\mathbf{x}^T \mathbf{Q}_0 \mathbf{x} + \mathbf{u}_2^T \mathbf{R}_0 \mathbf{u}_2 - \gamma^2 \mathbf{F}_w^T \mathbf{F}_w \right] \mathrm{d}t , \tag{25}$$

the controller minimizing the norm given by *Eq.* (24) is

$$\mathbf{K}_\infty^T(\gamma) = \mathbf{R}_0^{-1} \mathbf{B}_2^T \mathbf{X}_\infty(\gamma) , \tag{26}$$

where $\mathbf{X}_\infty(\gamma)$ is the positive semi-definite solution of the ARE belonging to the performance index *Eq.* (25). By using this H_∞ controller, the 'worst-case' disturbance maximizing the performance index *Eq.* (25) can be determined. The robustness of this controller is ensured by the Small-Gain Theorem (see for further detail, e.g. in MACIEJOWSKI (1989)).

The robustness of the controller in face of parametric uncertainties can be ensured by using RLQR method discussed in PETERSEN, HOLLOT (1986) and DOUGLAS (1991). The control system minimizes the following performance index:

$$J_{RLQR}(\lambda) =$$

$$\lim_{T\to\infty} \frac{1}{T} \int_0^T \left[\mathbf{x}^T \left(\mathbf{Q}_0 + \lambda \mathbf{N}^T \mathbf{N} \right) \mathbf{x} + u_2^T \mathbf{R}_0 u_2 + \frac{1}{\lambda} \mathbf{x}^T \mathbf{X}_{RLQR} \mathbf{L}\mathbf{L}^T \mathbf{X}_{RLQR} \mathbf{x} \right] \mathrm{d}t ,$$

where $\mathbf{X}_{RLQR}$ is positive semi-definite solution of the following ARE:

$$\mathbf{X}_{RLQR} \mathbf{A}_0 + \mathbf{A}_0 \mathbf{X}_{RLQR} + \left(\mathbf{Q}_0 + \lambda \mathbf{N}\mathbf{N}^T \right)$$

$$- \mathbf{X}_{RLQR} \left(\mathbf{B}_2 \mathbf{R}_0^{-1} \mathbf{B}_2^T - \frac{1}{\lambda} \mathbf{L}\mathbf{L}^T \right) \mathbf{X}_{RLQR} = 0 . \tag{28}$$

From the performance index *Eq.* (27) it can be seen that there is a difference between the usual form of the quadratic criterion belonging to the LQR problem. First difference is in the state weighting matrix: the additional term describes the uncertainty making the controller robust in face of parametric uncertainty. The last term of *Eq.* (27) is a kind of 'worst-case' disturbance. Its meaning becomes more clear if we use the following denotation:

$$\frac{1}{\lambda}\mathbf{x}^T\mathbf{X}_{RLQR}\mathbf{L}\mathbf{L}^T\mathbf{X}_{RLQR}\mathbf{x} = -\lambda\mathbf{d}_{RLQR}^T\mathbf{d}_{RLQR}\,, \tag{29}$$

where $\mathbf{d}_{RLQR}$ means the worst possible disturbance arising from the parametric uncertainties. The free parameter λ in *Eq.* (25) means the trade-off between the robustness and internal disturbance attenuation of the controller. When increasing the value of λ, the system will be robust in face of structured uncertainties given but the sensitivity is decreasing. By decreasing the value of λ the controller tends to the H_∞ solution. In the paper, the combination of the above described two methods gives a good compromise between the disturbance attenuation and the robustness of the controller.

5.2. Evaluation of Several Control Procedures

The active control of the quantities listed at the beginning of this part of the paper is more theoretical but the results achieved are promising. *Fig. 7* shows the state variable of the model for several controls applying standard step input on the steering wheel.

As it can be seen, the active 3rd wheel steering does not have any effect on the behaviour of the tractor, it makes that even worse, but it stabilizes the motion of the rear unit decreasing its oscillation. The steering of the rear wheel of the tractor affects all of the state-variables in a desired direction, namely it minimizes the sideslip and yaw rate of the front and decreases the oscillation of the rear unit. By applying torques in the joint and on the front unit, the results are close to each other, there is slightly larger difference in the motion of the trailer but it is not sufficient.

Of course, the above written solutions have mainly theoretical importance. In the future investigation of the problem, the attention will be focused on the practical realization by using the results of the theoretical investigation described above.

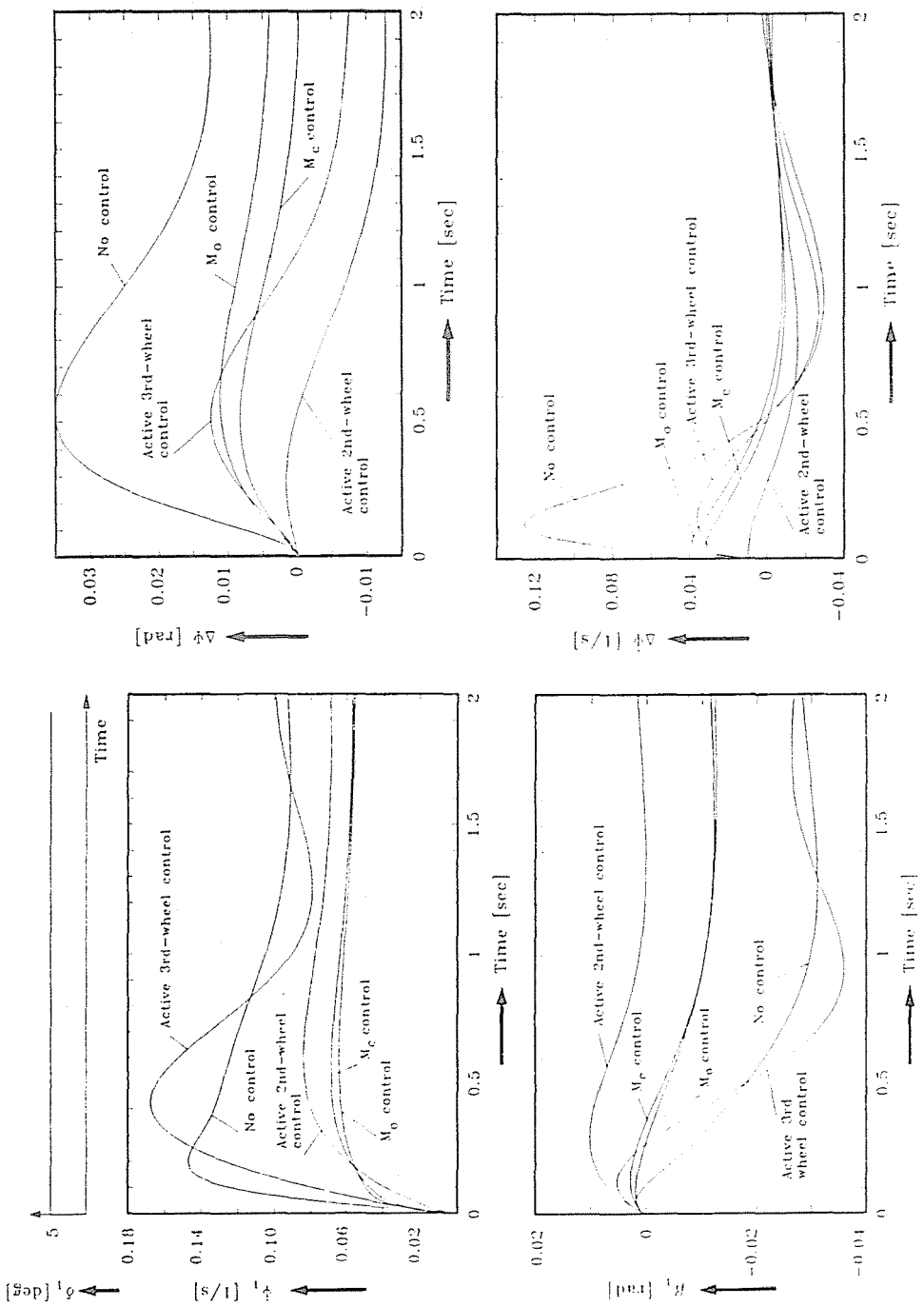
No control
Active 3rd-wheel control
M_o control
M_c control
Active 2nd-wheel control
Time [sec]
$\Delta\psi$ [rad]
$\Delta\dot{\psi}$ [1/s]
Time
σ_1 [deg]
$\dot{\psi}_1$ [1/s]
θ_1 [rad]
Active 2nd-wheel control
Active 3rd wheel control

Fig. 7.

6. Conclusions

In the paper, the stability and performance of a tractor-semitrailer combination were analyzed. Similar definition of the self-steering characteristics of articulated vehicles to that determined for the single vehicle is given. It was concluded that the best behaviour of the vehicle can be expected when the front vehicle unit is understeered and the defined virtual vehicle is oversteered. This examination provides the basis for the controller design. In the paper, some optimal controlling methods were considered as mainly theoretical solution for the active stabilization of tractor-semitrailer vehicle combination. In future investigation of the problem, more practical realizations will be examined.

Acknowledgements

This research is supported by the Hungarian Research and Development Fund (OTKA F–4084).

References

1. DOUGLAS, J. S.: Linear Quadratic Control for Systems with Structured Uncertainty, M.Sc. Thesis, MIT, 1991.
2. DOYLE, J. C. – GLOVER, K. – KHARGONEKAR, P. – FRANCIS, B.: State-Space Solution to Standard H_2 and H_∞ Control Problems, *Proc. American Contr. Conf.*, Atlanta, GA, 1988.
3. EL-GINDY, M. – ILOSVAI, L.: Vehicle Stability during Braking Manoeuvres, *International Journal of Vehicle Design*, Vol. 1, No. 3, pp. 231–238, 1980.
4. EL-GINDY, M.: Directional Response of a Tractor Towing a Semitrailer, *International Journal of Vehicle Design*, Vol. 10, No. 2, pp. 210–226, 1989.
5. EL-GINDY, M.: The Use of Heavy Vehicle Performance Measures for Design and Regulation, *1992 ASME WAM*, Anaheim, California, 8–13 November, 1992.
6. ELLIS, L. R.: Vehicle Dynamics, London, Business Books Ltd. 1960.
7. FRANCIS, B. A.: A Course in H_∞ Control Theory, Springer-Verlag, New York, Lecture Notes in Control and ..., Vol. 88, 1987.
8. HUSTON, J. E. – JOHNSON, D. B.: Basic Analytical Results for Lateral Stability of Car/Trailer System, *SAE Papers*, No. 820136, 1982.
9. ILOSVAI, L. – PALKOVICS, L.: Some Aspects of the Self-Steering Characteristics of Articulated Vehicles, *Proceedings of the XXI Meeting of Bus and Coach Experts*, Budapest, 3–6 September, 1990.
10. JOHNSON, D. B. – HUSTON, J. C.: Non-Linear Lateral Stability Analysis of Road Vehicles Using Liapunov's Second Method', *SAE Papers*, No. 841057, 1984.
11. KACANI, V. – STRIBERSKY, A. – TROGER, H.: Maneuverability of a Truck-Trailer Combination after Loss of Lateral Stability, *Proceedings of 10th IAVSD Symposium*, Prague, 24–28 August, 1987.

12. KAGEYAMA, I. – SAITO, Y.: Stabilization of Articulated Vehicles by Semiactive Control Method, *Proceedings of 10th IAVSD Symposium*, Prague, 24–28 August, 1987.
13. MACIEJOWSKI, J. M.: Multivariable Feedback Design, Addison-Wesley Publishing Company, Workingham, 1989.
14. MITSCHKE, M. – NAGAI, M.: Adaptive Behaviour of a Driver-Car System in Critical Situations; Analyses by Adaptive Model, *JSAE Review*, Vol. 5, pp. 82–89, 1985.
15. OKADA, T. – SAGISHIMA, T.: Effect of Tractive Froce on Directional Stability and Controllability of Vehicles, *SAE Papers*, No. 690527, Mid-Year Meeting, Chicago, 1969.
16. PACEJKA, H. B.: Tyre Modelling for Use in Vehicle Dynamic Studies, *SAE Papers*, No. 870421, 1987.
17. PALKOVICS, L.: Effect of the Controller Parameters on the Steerability of the Four Wheel Steered Car, *Vehicle System Dynamics*, Vol. 21, No. 2, pp. 109–128, 1992.
18. PETERSEN, I. R. – HOLLOT, C. V.: A Ricatti Equation Approach to the Stabilization of Uncertain Linear Systems, *Automatica*, Vol. 22 (4), pp. 397–411, 1986.
19. TROGER, H. – ZEMAN, K.: A Non-Linear Analysis of the Generic Types of Loss of Stability of the Steady-State Motion of a Tractor-Semitrailer, *Vehicle System Dynamics*, Vol. 13, pp. 161–172, 1984.
20. VERMA, V. S. – GUNTUR, R. R. – WONG. J. Y.: The Directional Behaviour During Braking of a Tractor/Semi-Trailer Fitted with Anti-Locking Devices, *International Journal of Vehicle Design*, Vol. 1, No. 3, pp. 195–220, 1980.
21. VLK, F.: A Linear Study of the Transient and Steady Turning Behaviour of Articulated Buses, *International Journal of Vehicle Design*, Vol. 5, No. 1/2, pp. 171–196, 1984.
22. WONG, J. Y.: Theory of Ground Vehicles, John Wiley and Sons, New York, 1980.
23. WOODROOFFE, J. H. – EL-GINDY, M.: Application of Handling and Roll Stability Performance Measures for Determining a Suitable Tractor Wheelbase, *International Symposium on Heavy Vehicle Weights and Dimensions*, Queens College, Cambridge, UK, June 28–July 2, 1992.

Appendix A

Relationship between the side slip angles of the tyres and state-variables in the case of a linearized model can be written

$$\alpha_i = -\beta_1 + \delta_i + (-1)^i \frac{l_i}{v} \dot{\Psi}_1 \quad (i = 1, 2)\,, \tag{A.1}$$

$$\alpha_3 = -\beta_1 - \Delta\Psi - \delta_3 + \frac{l_3 + l_4 + l_h}{v} \dot{\Psi}_1 - \frac{l_3 + l_4}{v} \Delta\dot{\Psi}\,. \tag{A.2}$$

Side slip angle of the rear vehicle unit can be expressed as

$$\beta_2 = \Delta\Psi + \beta_1 - \frac{l_h}{v} \dot{\Psi}_1 - \frac{l_3}{3} \dot{\Psi}_2 \tag{A.3}$$

and the relationship between the yaw angle of front and rear vehicle units

$$\Delta\Psi = \Psi_1 - \Psi_2\,. \tag{A.4}$$

With the above assumptions, the meaning of the matrices in *Eq.* (5) can be written

$$\mathbf{M} = \begin{bmatrix} J_1 & 0 & m_1 v l_h & 0 \\ -m_2 (l_h + l_3) & m_2 l_3 & (m_1 + m_2) v & 0 \\ J_2 & -J_2 & l_3 m_1 v & 0 \\ 0 & 0 & 0 & 1 \end{bmatrix},$$

$$\mathbf{P}_{(1,1)} = \frac{-C_{F\alpha 1} l_1^2 - C_{F\alpha 2} l_2^2 - C_{F\alpha 1} l_1 l_h + C_{F\alpha 2} l_2 l_h}{v} - m_1 l_h v\,,$$

$$\mathbf{P}_{(1,2)} = 0\,,$$

$$\mathbf{P}_{(1,3)} = -C_{F\alpha 1} l_1 + C_{F\alpha 2} l_2 - C_{F\alpha 1} l_h - C_{F\alpha 2} l_h\,,$$

$$\mathbf{P}_{(1,4)} = 0\,,$$

$$\mathbf{P}_{(2,1)} = \frac{-(m_1 + m_2) v^2 - C_{F\alpha 1} l_1 + C_{F\alpha 2} l_2 + C_{F\alpha 3} (l_3 + l_4 + l_h)}{v}\,,$$

$$\mathbf{P}_{(2,2)} = -C_{F\alpha 3} \frac{l_3 + l_4}{v}\,,$$

$$\mathbf{P}_{(2,3)} = -C_{F\alpha 1} - C_{F\alpha 2} - C_{F\alpha 3}\,,$$

$$\mathbf{P}_{(2,4)} = -C_{F\alpha 3}\,,$$

$$\mathbf{P}_{(3,1)} = \frac{C_{F\alpha 1} l_1 l_3 + C_{F\alpha 2} l_2 l_3 - C_{F\alpha 3} l_4 (l_3 + l_4 + l_h) - l_3 m_1 v^2}{v}\,,$$

$$\mathbf{P}_{(3,2)} = -C_{F\alpha 3} l_4 \frac{l_3 + l_4}{v}\,,$$

$$\mathbf{P}_{(3,3)} = C_{F\alpha 1} l_3 - C_{F\alpha 2} l_3 + C_{F\alpha 3} l_4\,,$$

$$\mathbf{P}_{(3,4)} = C_{F\alpha 3} l_4\,,$$

$$\mathbf{P}_{(4,1)} = \mathbf{P}_{(4,2)} = \mathbf{P}_{(4,3)} = 0C,$$

$$\mathbf{P}_{(4,4)} = 1\,,$$

$$\mathbf{D}_{\delta_1}^T = [\, C_{F\alpha 1} (l_1 + l_h) \quad C_{F\alpha 1} \quad C_{F\alpha 1} l_3 \quad 0 \,]\,,$$

$$\mathbf{D}_{F_w} = \begin{bmatrix} l_h - l_{w1} & 0 \\ 1 & 1 \\ l_3 & -l_{w2} \\ 0 & 0 \end{bmatrix}, \quad \mathbf{C} = \begin{bmatrix} -C_{F\alpha 2} (l_2 - l_h) & 0 & -1 & -1 \\ C_{F\alpha 2} & -C_{F\alpha 3} & 0 & 0 \\ C_{F\alpha 2} l_3 & C_{F\alpha 3} l_4 & 1 & 0 \\ 0 & 0 & 0 & 0 \end{bmatrix}.$$

Appendix B

The meaning of the matrices in the state-equation and in the output equations:

$$\mathbf{A}_0 = \mathbf{M}^{-1}\mathbb{P}\,, \quad \mathbf{B}_{1\delta_1} = \mathbf{M}^{-1}\mathbf{D}_{\delta_1}\,, \quad \mathbf{B}_{1F_w} = \mathbf{M}^{-1}\mathbf{D}_{F_w}\,, \quad \mathbf{B}_2 = \mathbf{M}^{-1}\mathbf{C}\,,$$

$$\begin{aligned}
\mathbb{C}_{1(1,1)} &= v\left(\mathbb{A}_{0(3,1)} + 1\right), \qquad \mathbb{C}_{1(1,2)} = v\mathbb{A}_{0(3,2)}\,,\\
\mathbb{C}_{1(1,3)} &= v\mathbb{A}_{0(3,3)}\,, \qquad \mathbb{C}_{1(1,4)} = v\mathbb{A}_{0(3,4)}\,,\\
\mathbb{C}_{1(2,1)} &= v\left(\mathbb{A}_{0(3,1)} + 1\right) + (l_h - l_3)\,\mathbb{A}_{0(1,1)} + l_3\mathbb{A}_{0(2,1)}\,,\\
\mathbb{C}_{1(2,2)} &= v\mathbb{A}_{0(3,2)} + (l_h - l_3)\,\mathbb{A}_{0(1,2)} + l_3\mathbb{A}_{0(2,2)}\,,\\
\mathbb{C}_{1(2,3)} &= v\mathbb{A}_{0(3,3)} + (l_h - l_3)\,\mathbb{A}_{0(1,3)} + l_3\mathbb{A}_{0(2,3)}\,,\\
\mathbb{C}_{1(2,4)} &= v\mathbb{A}_{0(3,4)} + (l_h - l_3)\,\mathbb{A}_{0(1,4)} + l_3\mathbb{A}_{0(2,4)}\,,
\end{aligned}$$

$$\mathbb{D}^T_{11\delta_1} = \left[v\mathbb{B}_{1\delta_1(3)} \quad \left[v\mathbb{B}_{1\delta_1(3)} + (l_h - l_3)\,\mathbb{B}_{1\delta_1(1)} + l_3\mathbb{B}_{1\delta_1(2)}\right]\right]\,,$$

$$\mathbb{D}_{11F_w} = \begin{bmatrix} v\mathbb{B}_{1F_w(3,1)} & v\mathbb{B}_{1F_w(3,2)} \\ v\mathbb{B}_{1F_w(3,1)} + (l_h - l_3)\,\mathbb{B}_{1F_w(1,1)} + l_3\mathbb{B}_{1F_w(2,1)} & v\mathbb{B}_{1F_w(3,2)} + (l_h - l_3)\,\mathbb{B}_{1F_w(1,2)} + l_3\mathbb{B}_{1F_w(2,2)} \end{bmatrix}$$

$$\begin{aligned}
\mathbb{D}_{12(1,j)} &= v\mathbb{B}_{2(3,j)}\,,\\
\mathbb{D}_{12(2,j)} &= v\mathbb{B}_{2(3,j)} + (l_h - l_3)\,\mathbb{B}_{2(1,j)} + l_3\mathbb{B}_{2(2,j)}\,, \qquad (j = 1, \ldots, 4)\,.
\end{aligned}$$